HMF EXPRESS

Borrowed Light - 1 Light Floor Mounted, Double Rabbet

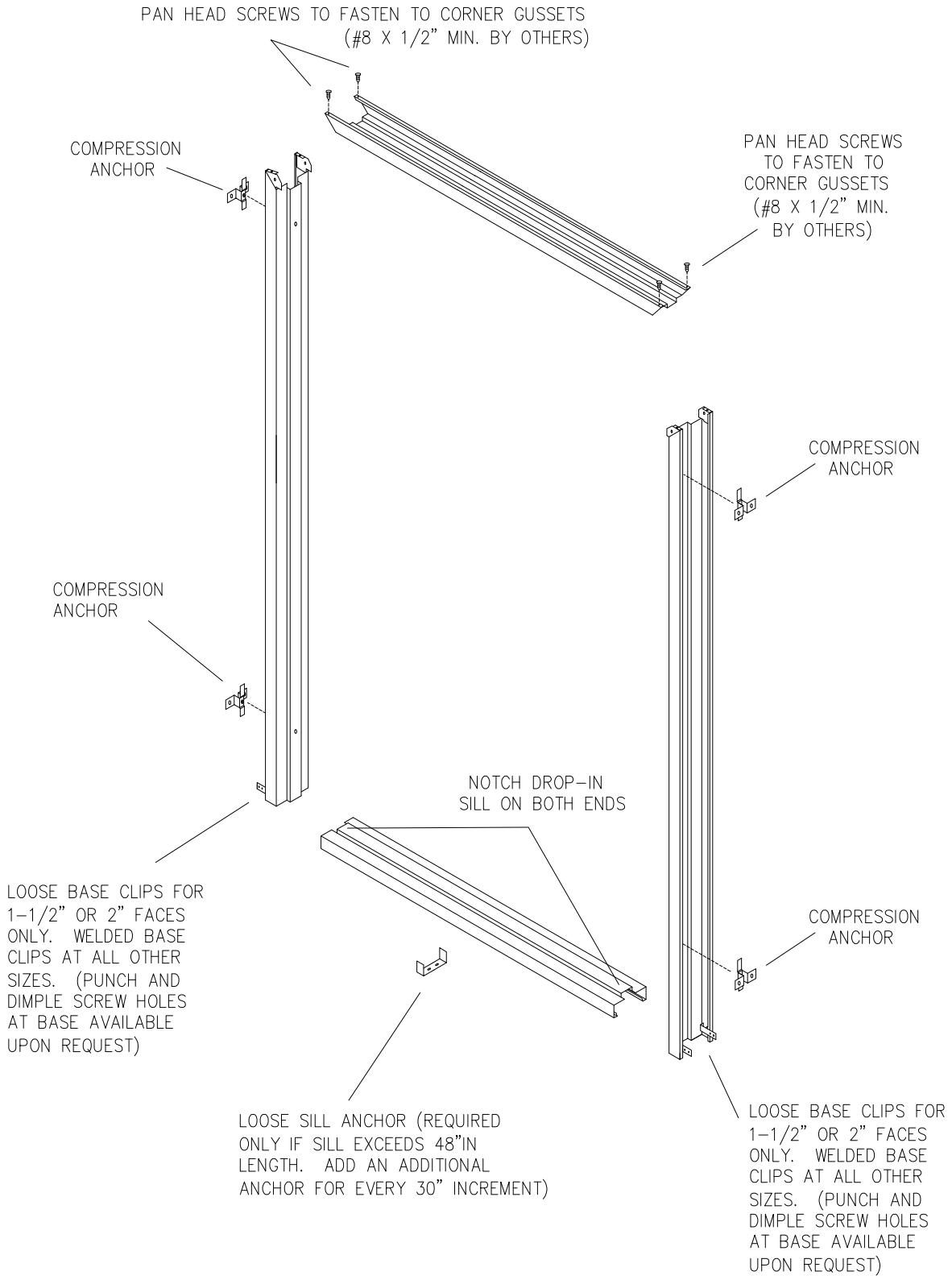

Phone 910-452-1845 Fax 910-42-1848
http://www.hmfexpress.com
Copyright 2014